DOOR STOP

Material:
Telescopic Cover Support: Steel, zinc plated

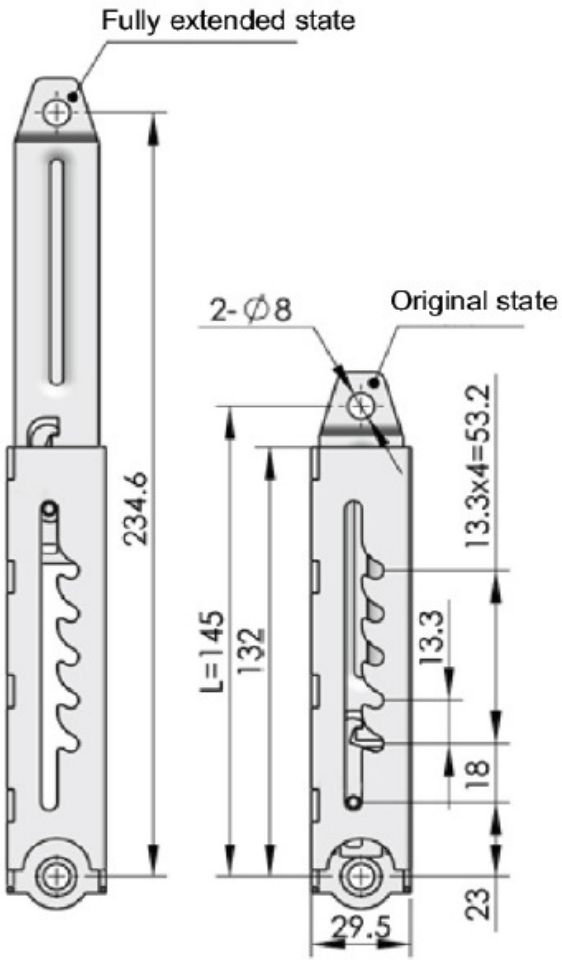

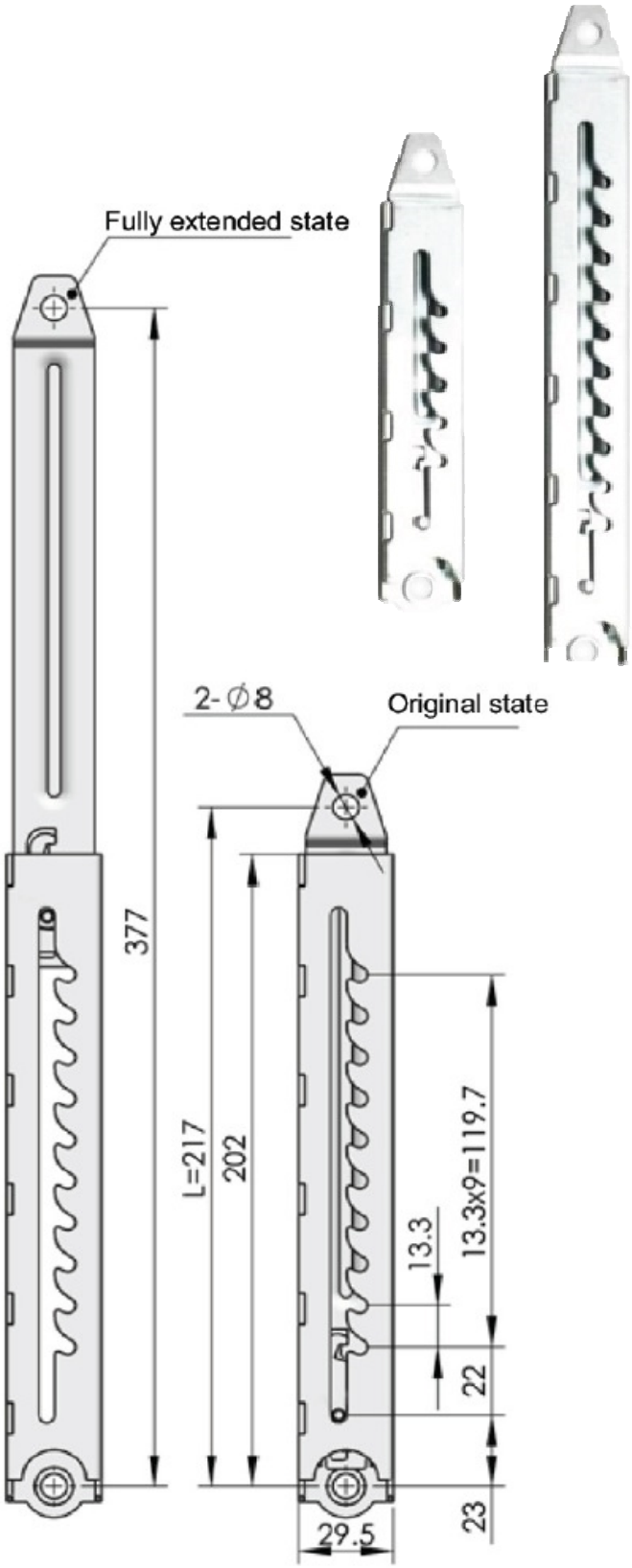

Overview of items

Version	Part No
Door Stop	Steel, zinc plated
5 Positions	PA5100110-000
10 Positions	PA5100120-000