Swinghandle for Rod Latch or Flat Rods , IP65

Material:
Swinghandle: PA6, black
Door dish:PA6, black
Rod Latch: Steel, Zinc plated
O-Ring: NBR
Seal: TPE
Screws and clamp: Steel, Zinc plated

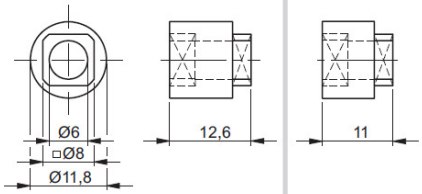

for thickness 2.5 mm,
PA1252840-000

for thickness 1.5 mm,
PA1252830-000

PA1900002-000

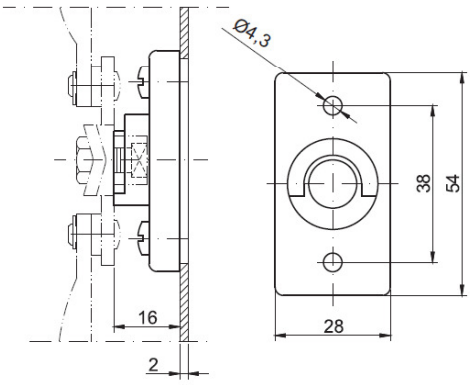

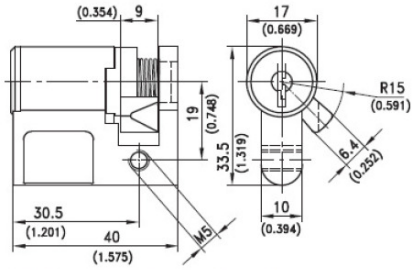

f) Profile Cylinder 40mm

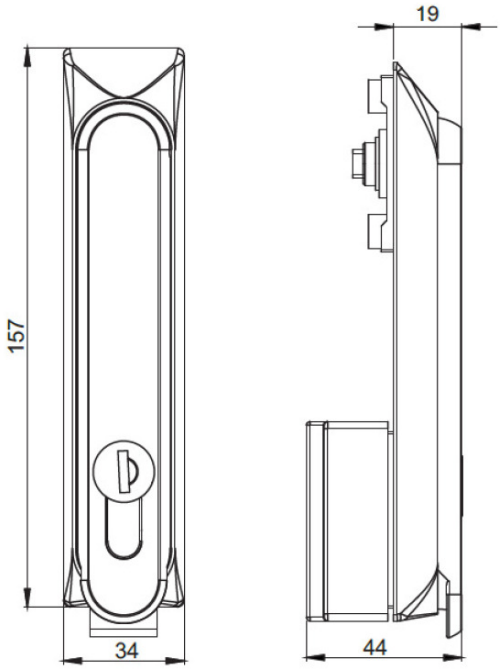

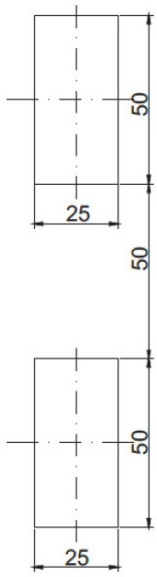

Mounting hole

a)

b)

c)

d)

e)

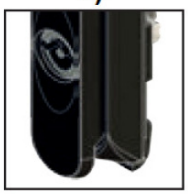

on request,
version without padlock

version	Part No.
a) Swinghandle for Profile Cylinder 40mm	**PA2405200-000**
b) Swinghandle for Profile Cylinder 40mm + Padlock	**PA2405201-000**
c) Swinghandle with Cylinder 333	**PA2405210-000**
d) Swinghandle with Cylinder 333 + Padlock	**PA2405215-000**
e) Swinghandle with insert Double-Bit	**PA2405232-000**
f) Profile Cylinder 40mm	**PA1224010-000**